Electrolux PROFESSIONAL

Flexy Compact Refrigerated stainless steel surface on cupboard (2GN) with wheels, overshelf with LED lights, H=900

ITEM #

MODEL #

NAME #

SIS #

AIA #

322033 (F14C2AW02S) Refrigerated stainless steel surface on cupboard (2 GN container capacity) with wheels, overshelf with LED lights and two stainless steel tray sliders, H=900mm (Nordic)

Short Form Specification

Item No.

Compact design, ideal for space saving environments. AISI 304 Foldable tray sliders on long sides. Unit mounted on 125 mm wheels 2 swivel and 2 with brakes. Soft closing doors on operator side. Underneath ambient cupboard with doors. A type AISI 304 overshelf equipped with LED lights designed for extra increased visibility on the surface for charming food display. Sleek, minimalist glass structure, food and dust does not get trapped and easy to clean. Curved glass. Sturdy body construction with laminated panelings on 4 sides. Designed to serve the food on plates. Food introduced at the correct temperature maintains its core temperature according to Afnor Standards. Automatic defrosting guarantees evaporators clearance and efficient well cooling. Digital control with temperature display with precise adjustment (0,1°C). Fully compliant HACCP digital controls include visible alarms. The bottom is equipped with copper tubes to ensure proper cooling, with this system the air touches the cold surface and gets cooled. Equipped with a drain hole to easily discharge top condensation. Wells in 304 AISI stainless steel with rounded corners to facilitate cleaning operations. The well is also equipped with a drain hole. High-density expanded polyurethane foam with cyclopenthane guarantees excellent well insulation to reduce energy dispersion. R290 refrigerant gas (GWP=3) to reduce environmental impact and increase cooling efficiency. Pressed Stainless steel top 30mm deep with rounded edges and drain hole for easier cleaning. 900mm worktop height.

APPROVAL:

Main Features

- Precise temperature control and setting at 0,1°C .
- As standard the product comes with digitally controlled thermostat which is in line of HACCP norms and provides visual alarm as a warning of the increasing or decreasing temperatures.
- Food introduced at the correct temperature maintains its core temperature according to Afnor Standards.
- Automatic defrosting guarantees evaporators clearance and efficient well cooling.
- Designed to serve the food on plates .
- When the temperature of the surface is cooled down to below 0 °C, the humidity in the air forms ice on the surface. If there is air circulation in the ambient, there is condensation on the surface instead of ice.
- Equipped with a drain hole to easily discharge top condensation.
- Surface mat is available as an accessory.
- Thanks to the sleek, minimalist glass structure, food and dust does not get trapped and the cleaning is made easier.
- Available dimensions: 2, 3, 4 GN.
- Curved glass.
- Stylish A type overshelf designed for extra increased visibility on the surface for charming food display.
- Unit mounted on 125 mm wheels 2 swivel and 2 with brakes.
- Ideal for servery lines without an operator.
- AISI 304 Tray slider in flush mounted stainless steel is installed on long sides and they can also be folded down to facilitate passage of the units through doorways.
- Optional plinth can be installed to cover the feet or the wheels.
- Overshelf equipped with LED lights.
- Available options with online configurator: colors, tray sliders, overshelves, feet/wheels with desired diameter, height 750mm for kids.
- Underneath ambient cupboard with doors ideal for extra storage.
- Soft closing doors on operator side.
- CB and CE certifed by a third party notified body.
- Perfect compact design makes it ideal for space saving environments.

Construction

- Electronic control with temperature display.
- Well bottom is inclined to facilitate water drainage.
- Well in 304 AISI stainless steel with rounded corners to facilitate cleaning operations. The well is also equipped with a drain hole.
- IPx2 water protection.
- The bottom is equipped with copper tubes to ensure proper cooling, with this system the air touches the cold surface and gets cooled.
- Pressed Stainless steel top 30mm deep with

rounded edges and drain hole for easier cleaning.
- Overshelf in complete AISI 304.
- Top in AISI 304.
- Sturdy construction with laminated panelings on 4 sides.

Sustainability

- Hydrocarbon refrigerant gas R290 for the lowest environmental impact (GWP=3) - CFC and HCFC free.
- High-density expanded polyurethane foam with cyclopenthane guarantees excellent well insulation to reduce energy dispersion.

The company reserves the right to make modifications to the products without prior notice. All information correct at time of printing.

Electrolux PROFESSIONAL

Flexy Compact
Refrigerated stainless steel surface on cupboard (2GN) with wheels, overshelf with LED lights, H=900

Front

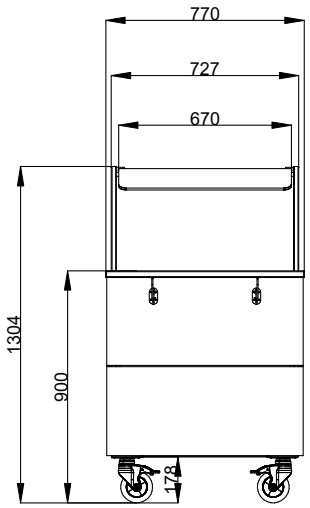

Side

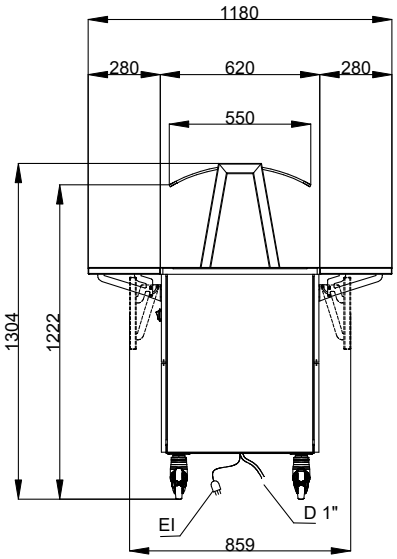

D = Drain
EI = Electrical inlet (power)

Top

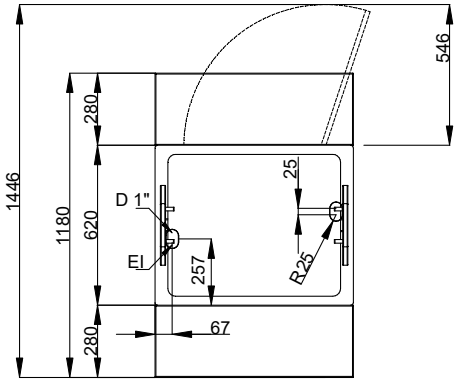

Electric

Supply voltage:	
322033 (F14C2AW02S)	220-240 V/1N ph/50 Hz
Electrical power max.:	0.49 kW

Capacity:

Capacity - nr./plates:	0

Key Information:

N° of doors:	1
External dimensions, Width:	770 mm
External dimensions, Depth:	1180 mm
External dimensions, Height:	1304 mm
Net weight:	108.5 kg
Shipping height:	1334 mm
Shipping width:	810 mm
Shipping depth:	899 mm
Shipping volume:	0.97 m³
Set temperature:	-10 / 0 °C
Top temperature:	-10 / 0 °C

Sustainability

Noise level:	59 dBA

The company reserves the right to make modifications to the products without prior notice. All information correct at time of printing.

2024.10.08